Ibanez SERVICE MANUAL

AD80 ANALOG DELAY

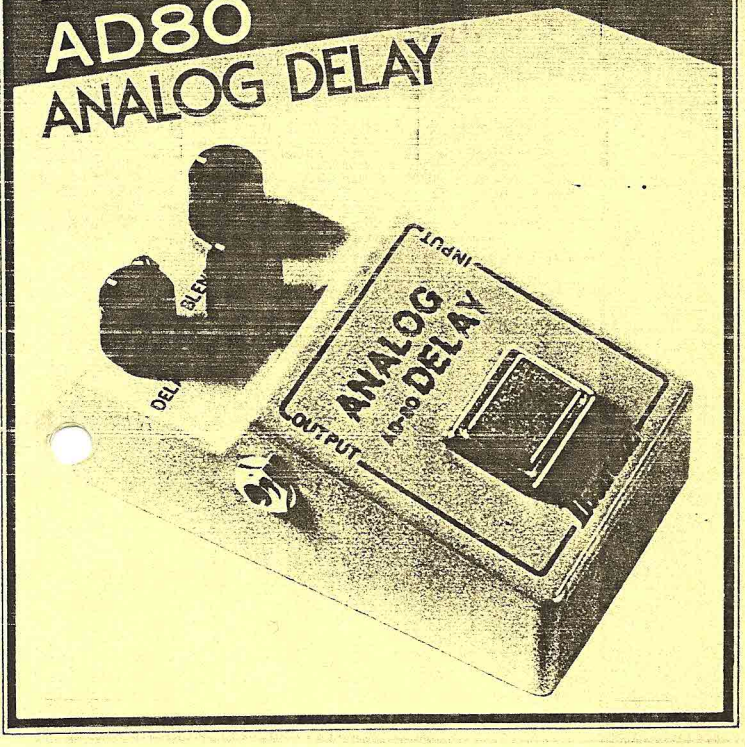

DISPOSITION OF PARTS

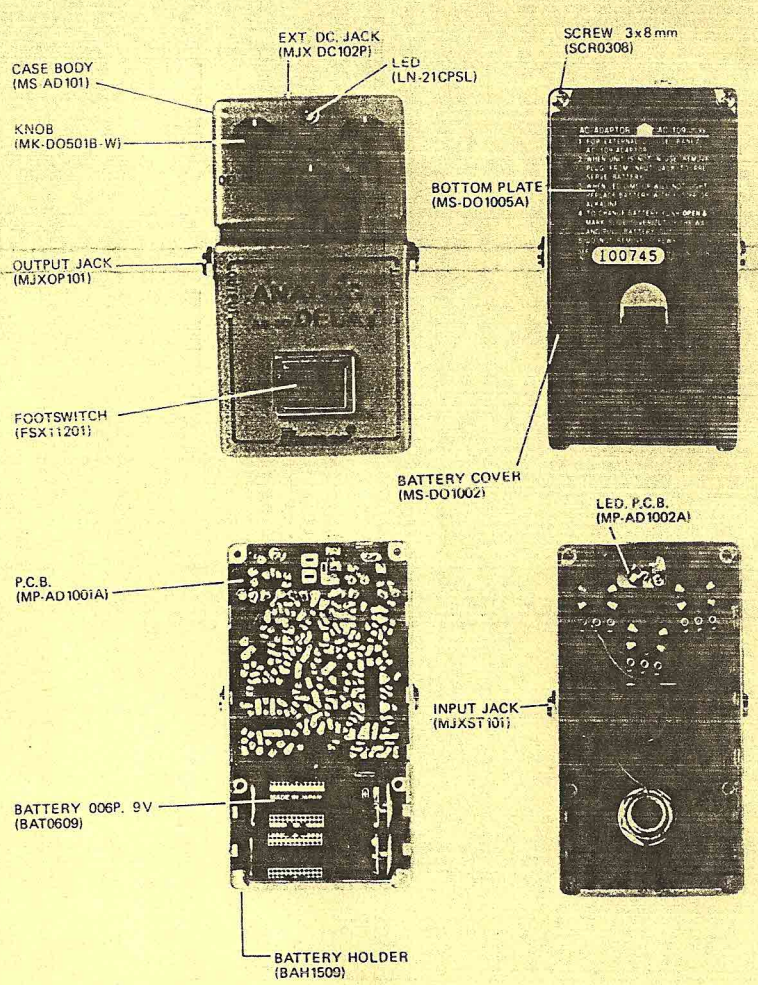

PARTS LIST

PARTS NAME	TYPE	PARTS NO.	REF. NO.
CASE BODY		MS AD101	
BOTTOM PLATE		MS DO1005A	
BOTTOM RUBBER		BR DO1003A	
BATTERY-COVER		MS DO1002	
BATTERY-RUBBER		BR DO1004A	
P.C		MP AD1001A	
FO SWITCH	ELECTRIC	FSX11201	
INPUT JACK	MOLD STEREO	MJXST101	
OUTPUT JACK	MOLD OPEN	MJXOP101	
KNOB		MK DO0501B-W	
BATTERY	006P 9V		
BATTERY HOLDER	200mm		
SCREW	3x8mm		
LED	LN-21CPSL	LN-21CPSL	
LED P.C.B.		MP-AD1002A	
EXT. DC. JACK		MJX. DC. 102P	
IC	MN3005	MN3005	IC103
IC	MN3101	MN3101	IC104
IC	NE570N	NE570N	IC102
IC	TL022CP	TL022CP	IC101
Tr.	2SC536SPE	2SC536SPE	Q101 – 103, 106 – 108
FET	2SK44SPC$_2$	2SK44SPC$_2$	Q104 – 105
DIODE	RD12EB	RD12EB	D105
DIODE	WO3C	WO3	D106
DIODE	MA150	MA150	D101 – 104
VARIABLE RESISTOR	16ϕ – 10KC	PMXB155R103BSC	REPEAT
VARIABLE RESISTOR	16ϕ – 50KB	PMXB155R503GSC	BLEND
VARIABLE RESISTOR	16ϕ – 500KA	PMXB155R504ASC	D-TIME
SEMI FIXED RESISTOR	10K3P	RSFST103P3	VR103
SEMI FIXED RESISTOR	20K3P	RSFST203P3	VR102, 105
SEMI FIXED RESISTOR	50K3P	RSFST503P3	VR104
SEMI FIXED RESISTOR	1M3P	RSFST105P3	VR101

P.C.B.

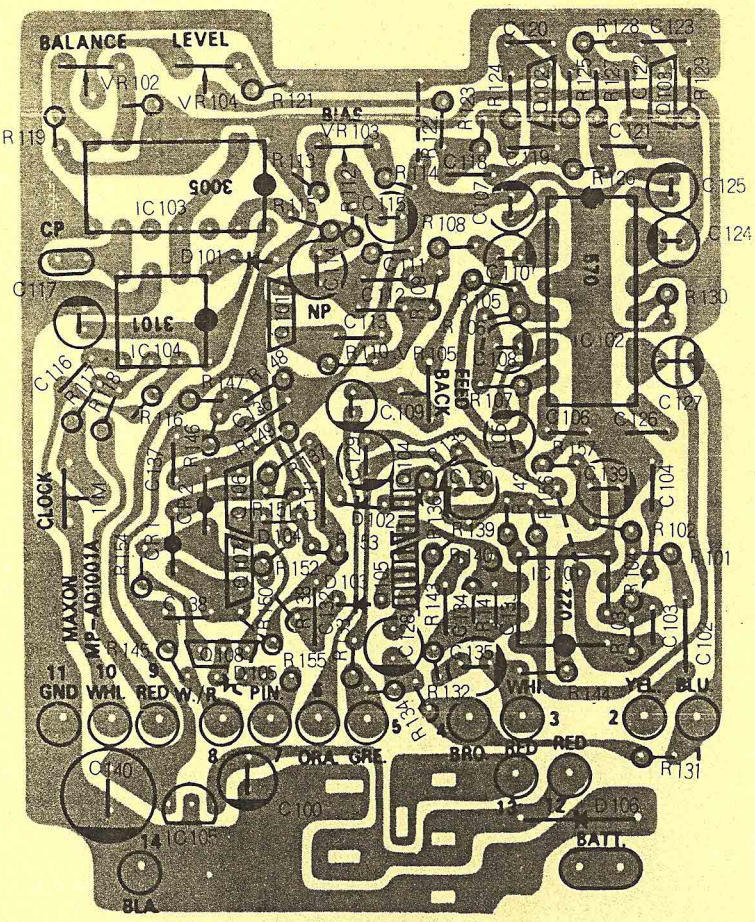

BLOCK DIAGRAMS

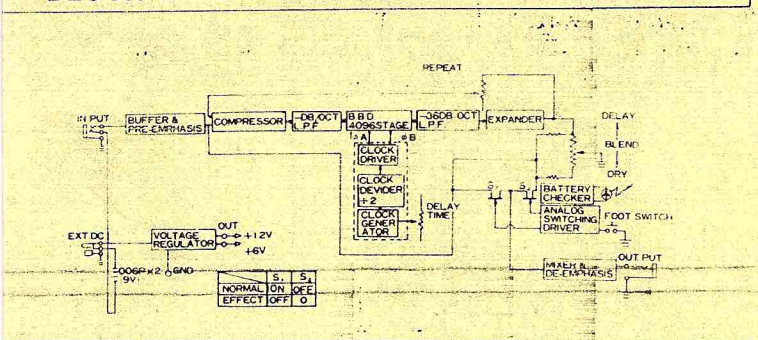

ADJUSTMENT PROCEDURES

1) **CLOCK**
   1. Set DELAY TIME controls fully CW and REPEAT controls fully CCW.
   2. Adjust VR101 for a frequency of 6.8KHz at marked CP .
   3. Set DELAY TIME controls fully CCW.
   4. Make sure the frequency is higher than 200KHz at marked CP .
2) **BBD BIAS**
   1. Put 1.1V (+3dBm) 400Hz sinewave into INPUT.
   2. Set DELAY TIME controls fully CW, BLEND controls fully CW and REPEAT controls fully CCW.
   3. Adjust VR103 for undistorted OUTPUT signal.
3) **BALANCE OF DELAY LEVEL**
   1. Short INPUT
   2. Set DELAY TIME controls fully CW BLEND controls fully CW and REPEAT controls fully CCW.
   3. Adjust VR102 for wave form as shown in Fig. A. at center termianl of VR102 (BBD OUTPUT).
4) **DELAY LEVEL**
   1. Put 78mV (−20dBm) 400Hz sinewave into INPUT.
   2. Set DELAY TIME controls fully CW and REPEAT controls fully CCW.
   3. Adjust VR104 for same OUTPUT level when BLEND controls is fully CW or CCW (DELAY or DRY only.)

TROUBLE SHOOTING

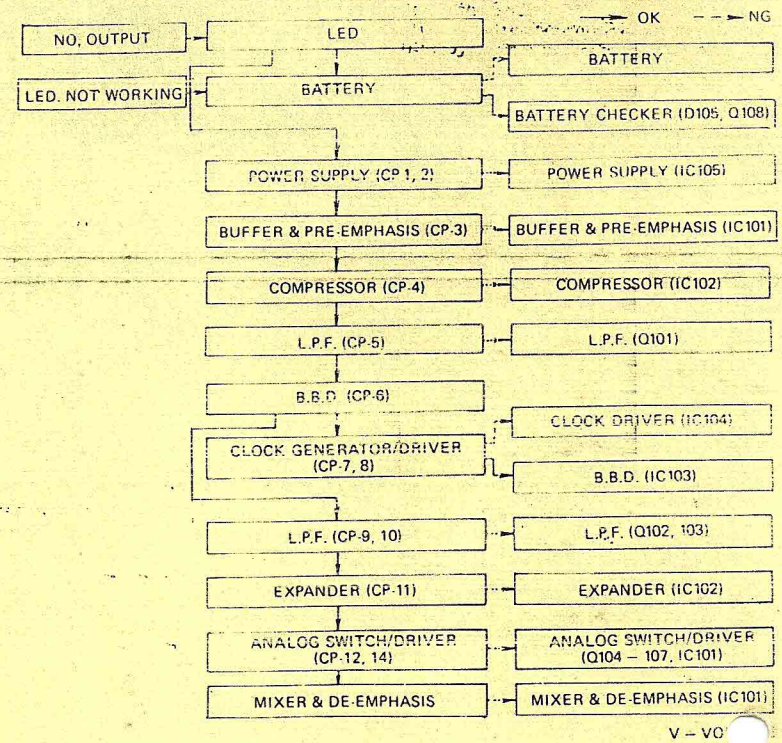

V – VO
S – SIG

REMARK: SIGNAL OF CP IS THE WAVE INPUTTING A SINE WAVE SIGNAL TO INPUT.

CP 1	CP 2	CP 3	CP 4	CP 5	CP 6	CP 7	CP 8	CP 9	CP 10	CP 11
V	V	S	S	S	S	S	S	S	S	S
12V	6V									

	CP 12	CP 13	CP 14
	V	V	S
EFFECT	7V	7V	
NORMAL	0.5V	0.5V	

SCHEMATIC DIAGRAMS

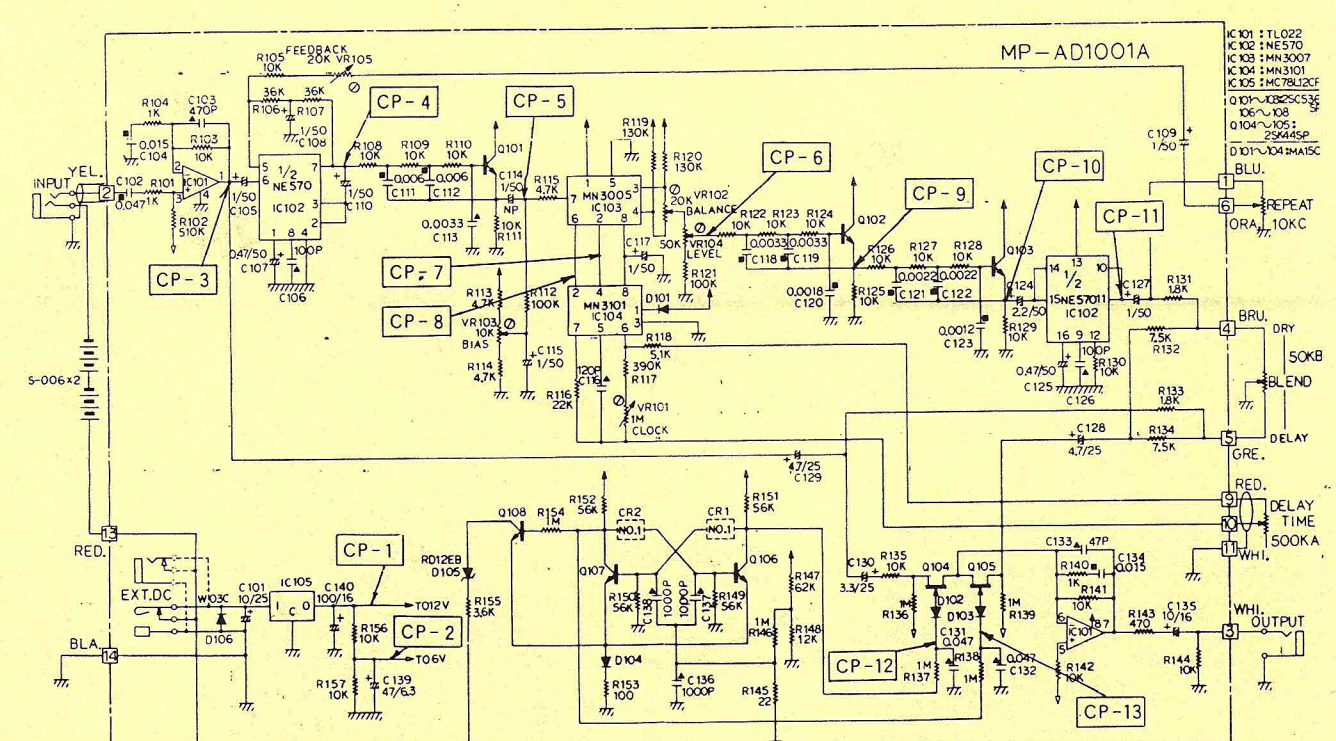

NOTE

▲: CERAMIC capacitor. All ceramic capacitors are above 25V rating.
■: MYLAR capacitor. All mylor capacitors are above 50V rating.
NP: NON POLAR capacitor.

And all capacitors are ELECTOLYTIC capacitors, unless otherwise marked.
Unless otherwise indicated:
Resistance in Ω, K = K Ω, M = MΩ
Resistors, 1/8W, ±5% rating
Capacitance in pF μ = μF