Ibanez SERVICE MANUAL

CP835 COMPRESSOR II

DISPOSITION OF PARTS

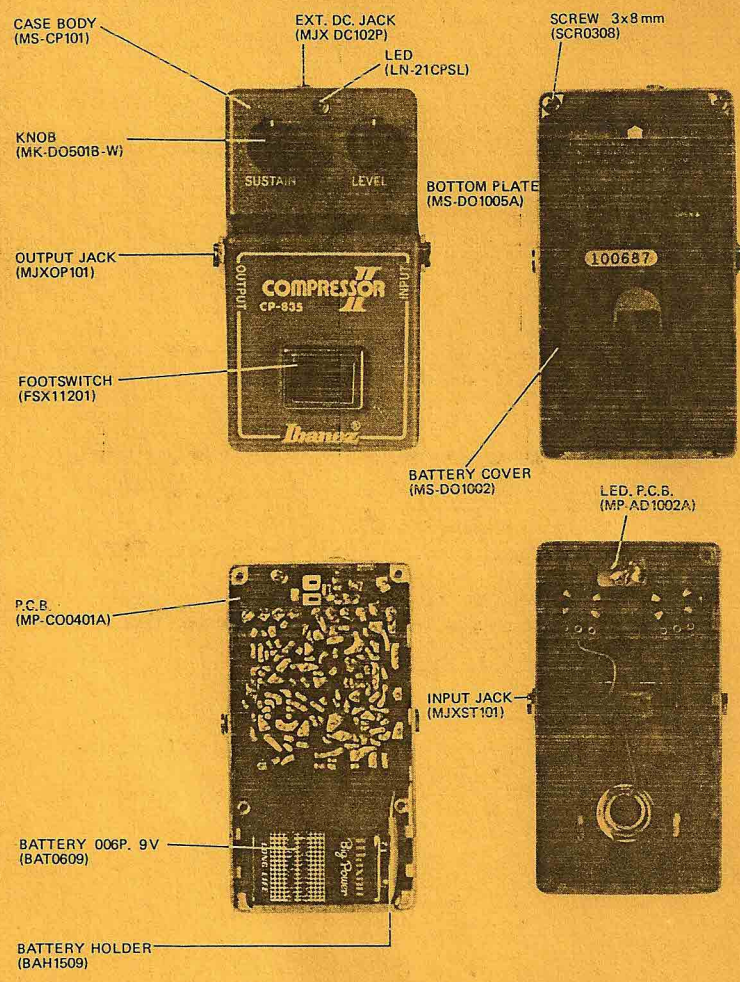

PARTS LIST

PARTS NAME	TYPE	PARTS NO.	REF. NO.
CASE BODY		MS CP101	
BOTTOM-PLATE		MS DO1005A	
BOTTOM-RUBBER		BR DO1003A	
BATTERY COVER		MS DO1002	
BATTERY RUBBER		BR DO1004A	
P.C.B.		MP PO1101A	
FOOT SWITCH	ELECTRIC	FSX11201	
INPUT JACK	MOLD STEREO	MJXST101	
OUTPUT JACK	MOLD OPEN	MJXOP101	
KNOB		MK-DO0501B-W	
BATTERY	006P 9V	BAT0609	
BATTERY HOLDER	200 mm	BAH1509	
SCREW	3x8 mm	SCR3080	
LED	LN 21CPSL	LN-21CPSL	
LED. P.C.B.		MP-AD1002A	
EXT. DC. JACK		MJXDC102P	
IC	CA3080	CA3080	IC101
Tr.	2SC1815BL	2SC1815BL	Q101 – 105, 107, 109 – 111
FET	2SK44SPC$_2$	2SK44SPC$_2$	Q106, 108
DIODE	RD5.1EB	RD5.1EB	D106
DIODE	MA150	MA150	D101 – 105
VARIABLE RESISTOR	16ϕ 100KB	PMXB155R104BSC	
VARIABLE RESISTOR	16ϕ 500KC	PMXB155R504CSC	
SEMI FIXED RESISTOR	2K3P	RSFST202P3	VR101

P.C.B.

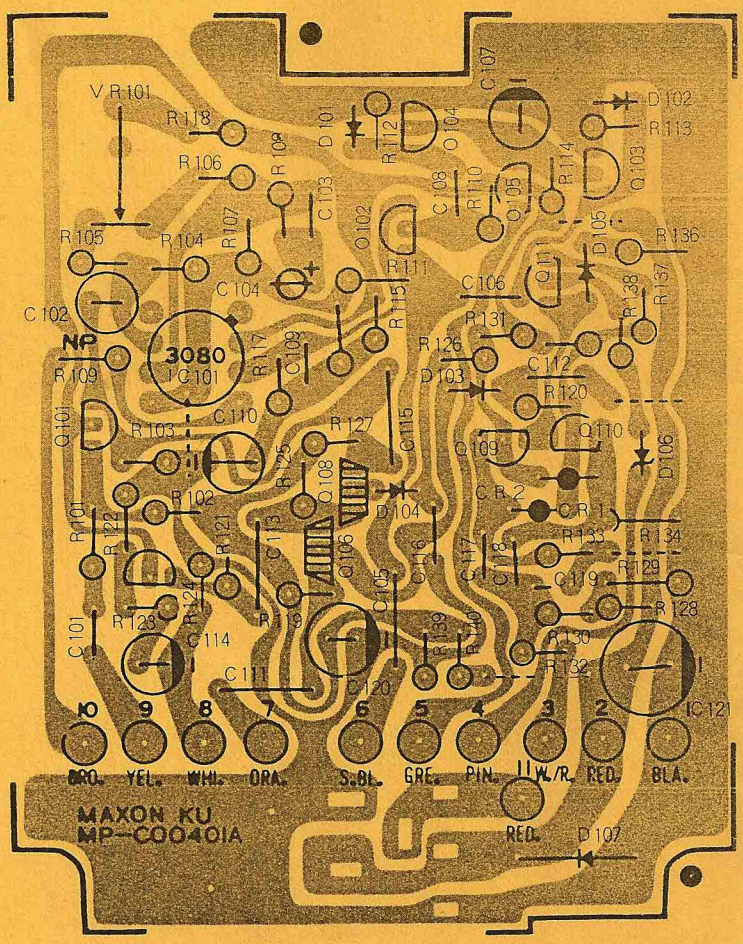

BLOCK DIAGRAMS

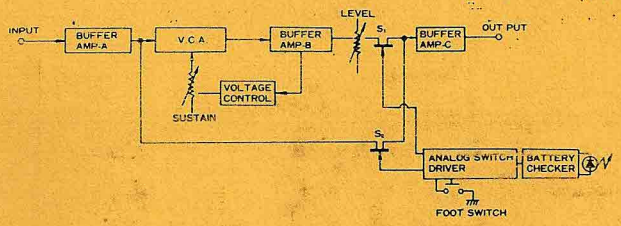

SWITCHING CHART

	S_1	S_2
EFFECT	ON	OFF
NORMAL	OFF	ON

TROUBLE SHOOTING

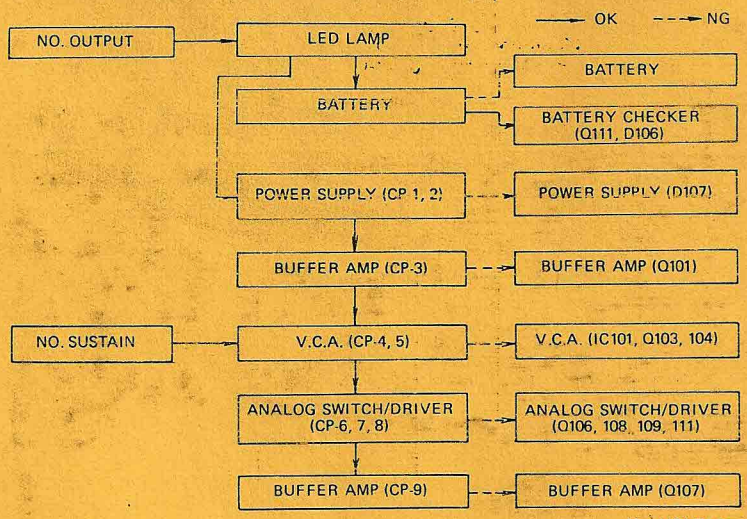

REMARK: SIGNAL OF CP IS THE WAVE INPUTTING A SINE WAVE SIGNAL TO INPUT.

CP-1	CP-2	CP-3	CP-4	CP-5	CP-5		CP-7		CP-8	CP-9
V	V	S	S	S	V		V		S	S
					E-ON	E-OFF	E-ON	E-OFF		
9	4.5	∿	∿	∿	5.5	0.5	0.5	5.5	∿	∿

ADJUSTMENT PROCEDURES

1. Put 5mV 400Hz sinewave into INPUT.
2. Set SUSTAIN and LEVEL controls fully CW.
3. Adjust VR101 for no distortion and maximam output level.
4. Put 50mV 400Hz sinewave into INPUT.
5. Adjust VR101 for same output level as step 3 within ±2dB.
6. Put 500mV 400Hz sinewave into INPUT.
7. Repeat step 5.

SCHEMATIC DIAGRAMS

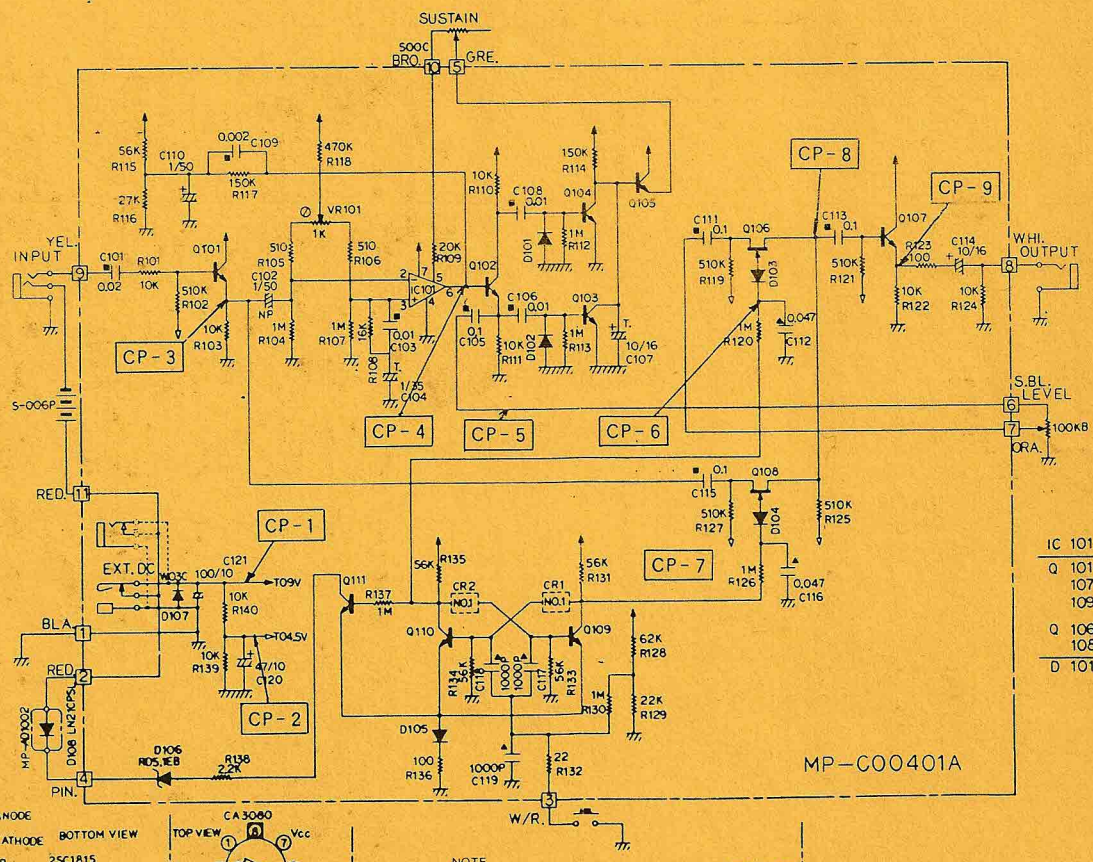

IC 101		:CA3080
Q 101~105		:2SC1815BL
107		
109~111		
Q 106		:2SK44SP
108		
D 101~105		:MA150

NOTE
▲: CERAMIC capacitor. All ceramic capacitors are above 25V rating.
■: MYLAR capacitor. All mylor capacitors are above 50V rating.
NP: NON POLAR capacitor.
T: TANTALUM capacitor.

And all capacitors are ELECTOLYTIC capacitors, unless otherwise marked.
Unless otherwise indicated:
Resistance in Ω, K = KΩ, M = MΩ
Resistors, 1/4W or 1/8W, ±5% rating
Capacitance in pF μ = μF